HOW TO USE THIS ATLAS

Each view is the catalog drawing for the stated variant or ratio group. Use the printed labels, not a scale measurement. These are reference drawings, not CAD files.

EDA752 / Drawing atlas

CONTENTS

R01	1 views | pages 2-2
R02	1 views | pages 3-3
R05	1 views | pages 4-4
R04	1 views | pages 5-5
R07	1 views | pages 6-6
R03	1 views | pages 7-7
R06	1 views | pages 8-8
L04	1 views | pages 9-9
L03	1 views | pages 10-10
L07	1 views | pages 11-11
L01	1 views | pages 12-12
L06	1 views | pages 13-13

CONTACT HTROBOT

Email: emmy@htrobot.com

Website: www.htrobot.com

EDA75Z | Dimension drawing

Catalog drawing

EDA75Z R01 dimension drawing illustrate:L1=Scalable length+104,L2=Scalable length+253 | R01

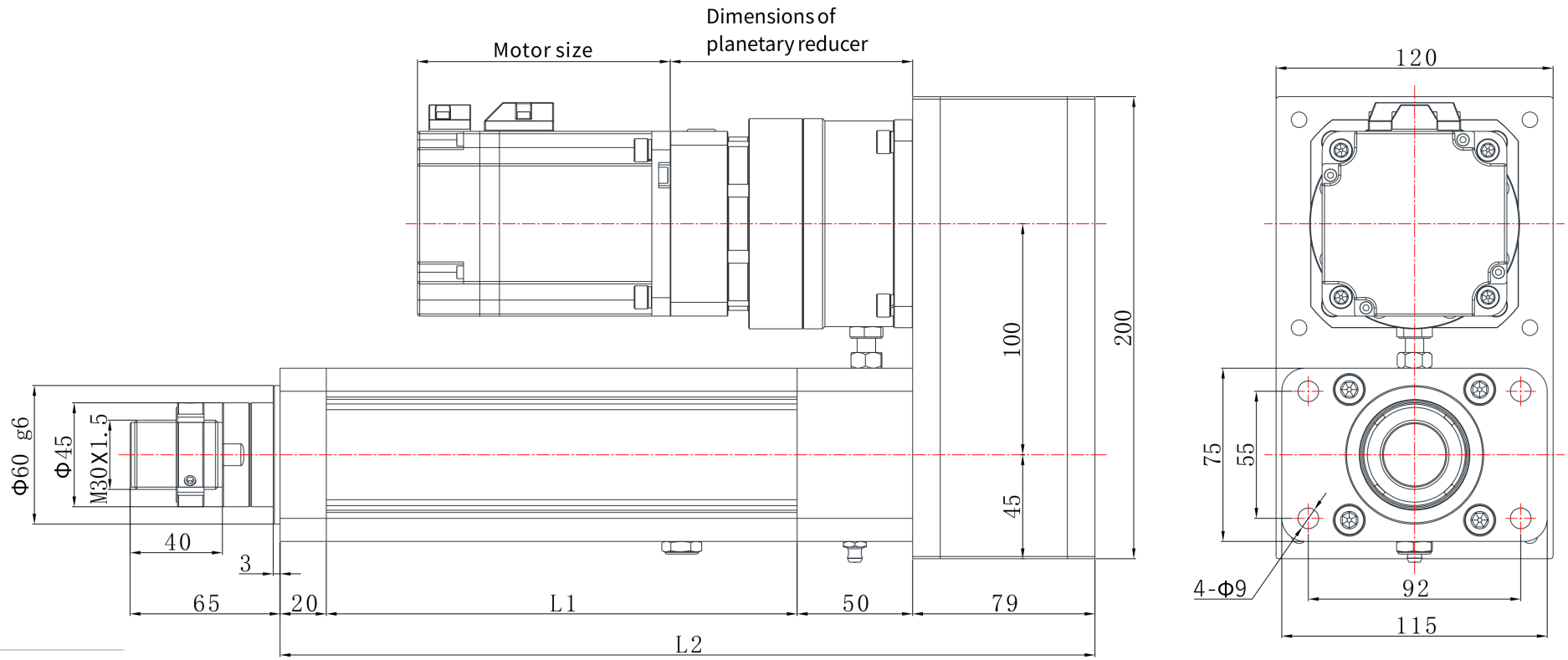

EDA75Z | Dimension drawing

Catalog drawing

EDA75Z R02 dimension drawing illustrate:L1=Scalable length+104,L2=Scalable length+253 | R02

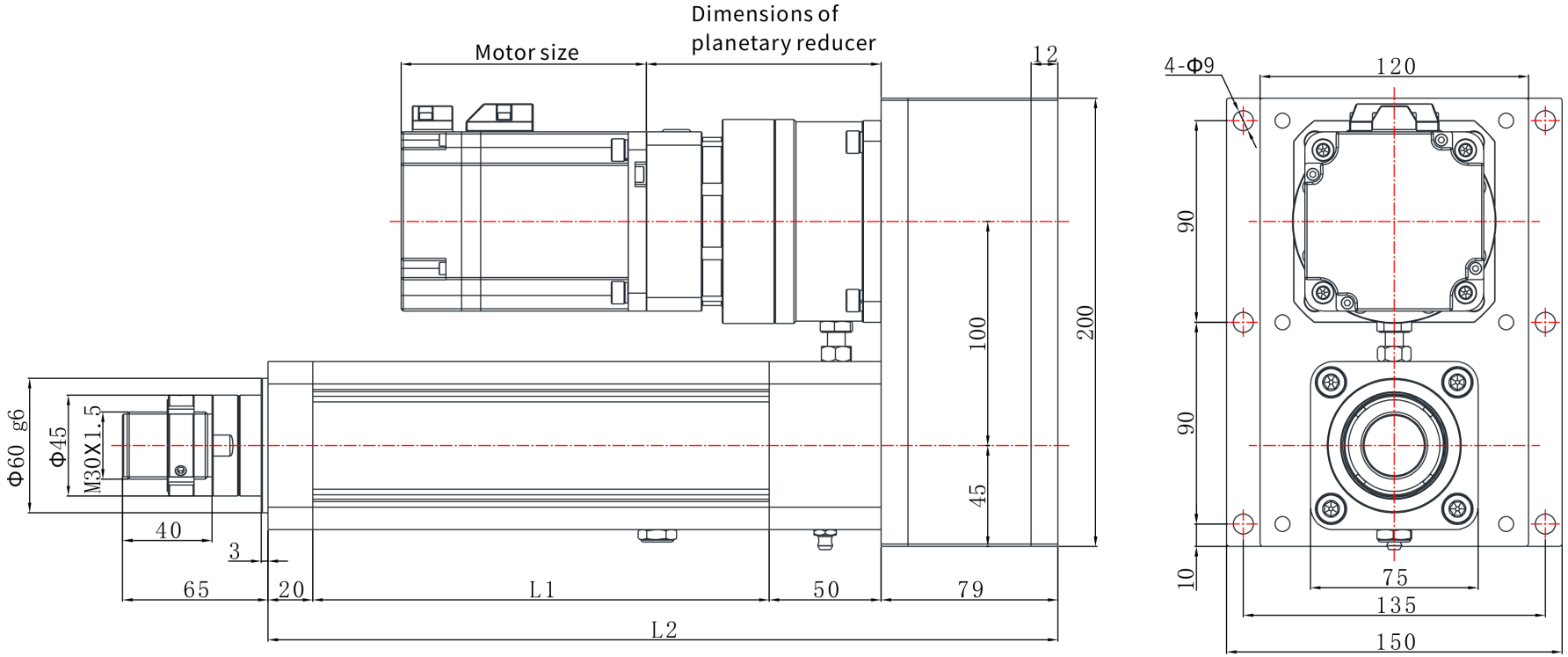

EDA75Z | Dimension drawing

Catalog drawing

EDA75Z R05 dimension drawing illustrate:L1=Scalable length+104,L2=Scalable length+405 | R05

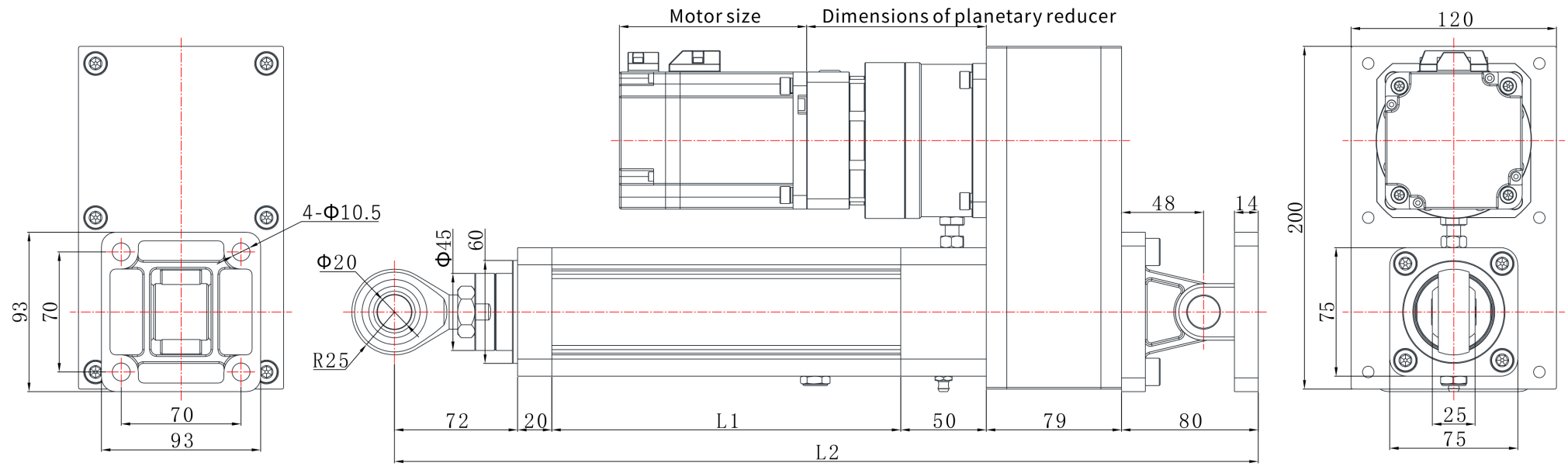

EDA75Z | Dimension drawing

Catalog drawing

EDA75Z R04 dimension drawing illustrate:L1=Scalable length+104,L2=Scalable length+253 | R04

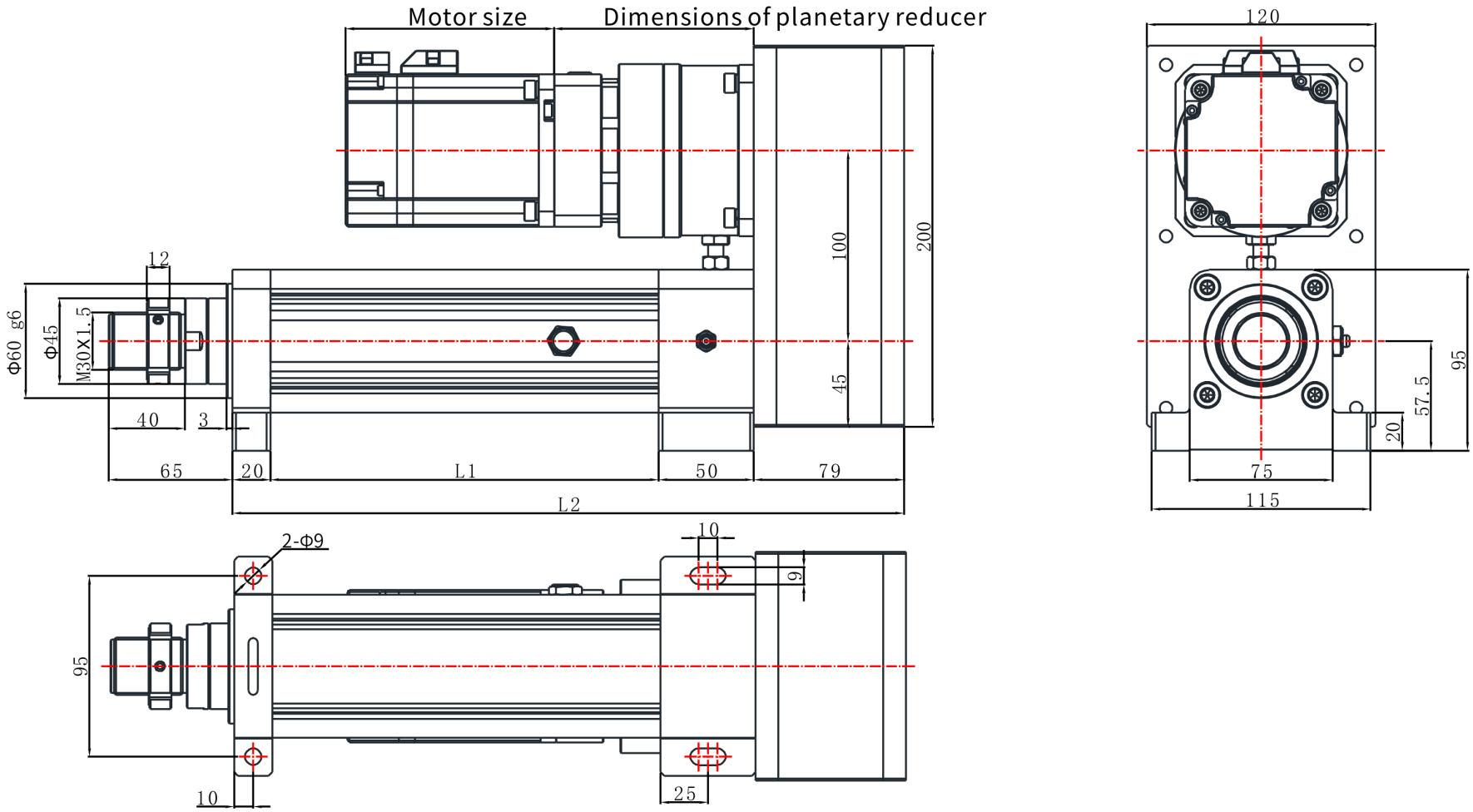

EDA75Z | Dimension drawing

Catalog drawing

EDA75Z R07 dimension drawing illustrate:L1=Scalable length+104,L2=Scalable length+263 | R07

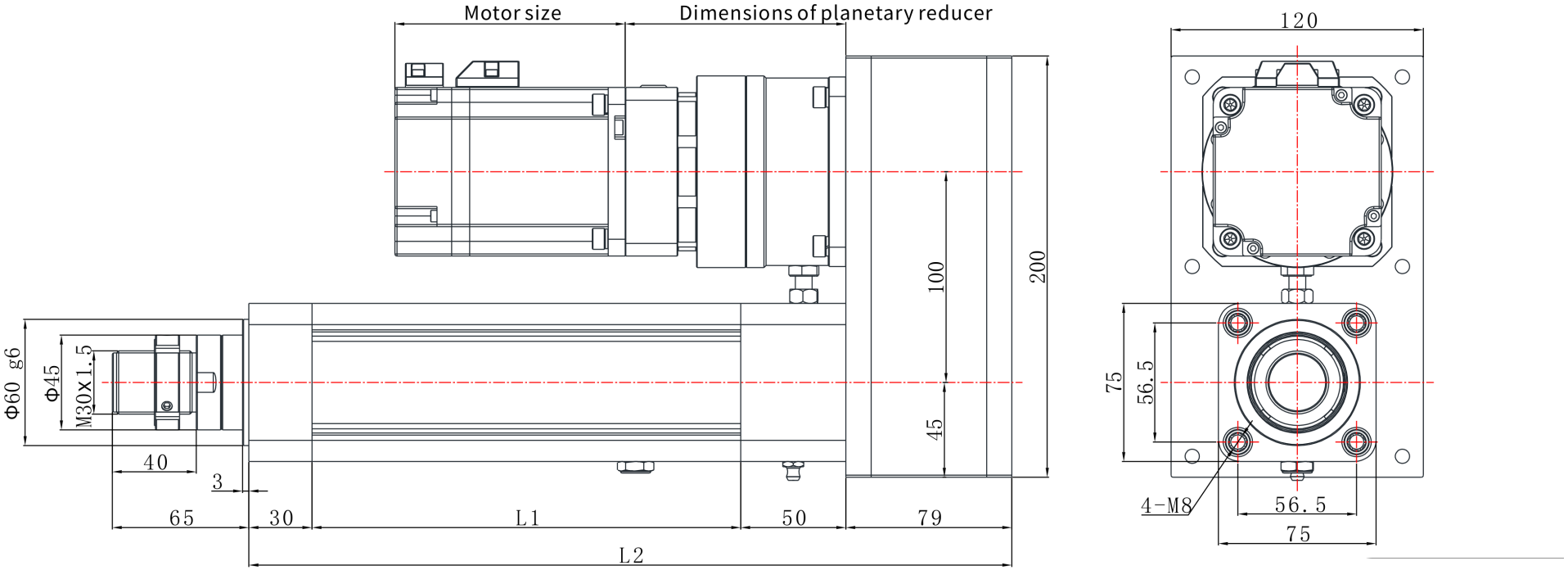

EDA75Z | Dimension drawing

Catalog drawing

EDA75Z R03 dimension drawing illustrate:L1=Scalable length+104,L2=Scalable length+253 | R03

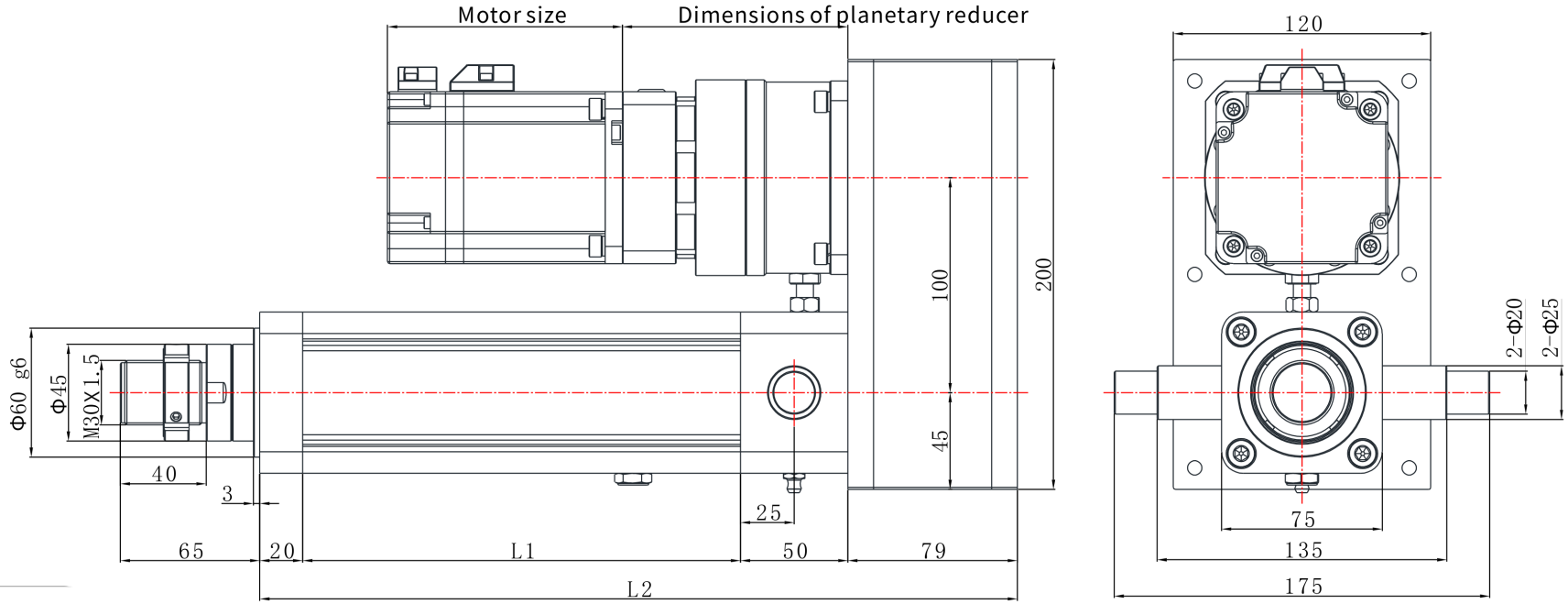

EDA75Z | Dimension drawing

Catalog drawing

EDA75Z R06 dimension drawing illustrate:L1=Scalable length+104,L2=Scalable length+314 | R06

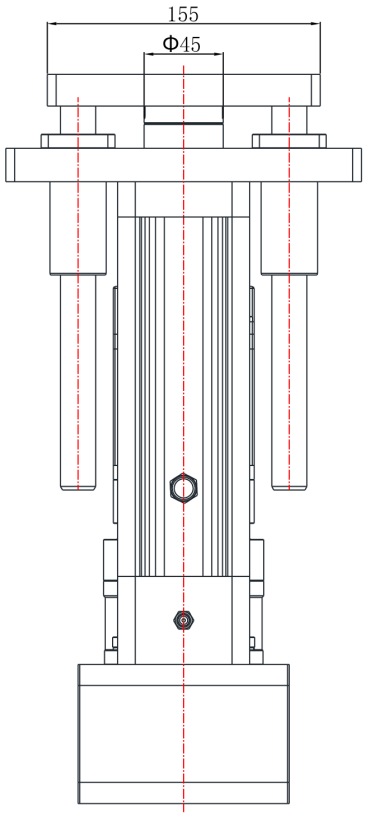

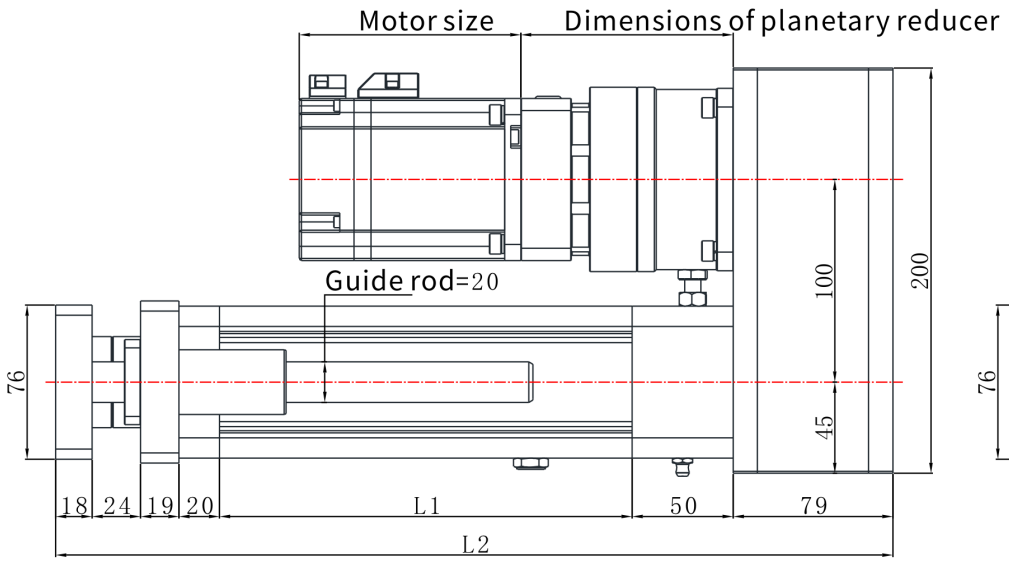

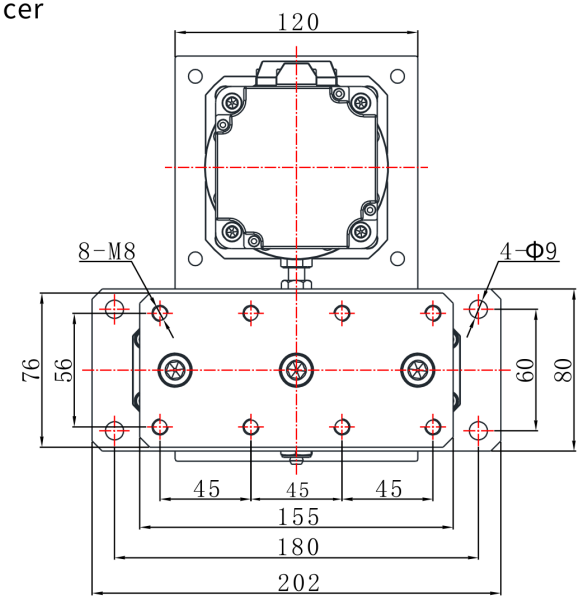

EDA75Z | Dimension drawing

Catalog drawing

EDA75Z L04 dimension drawing illustrate:L1=Scalable length+104,L2=Scalable length+245 | L04

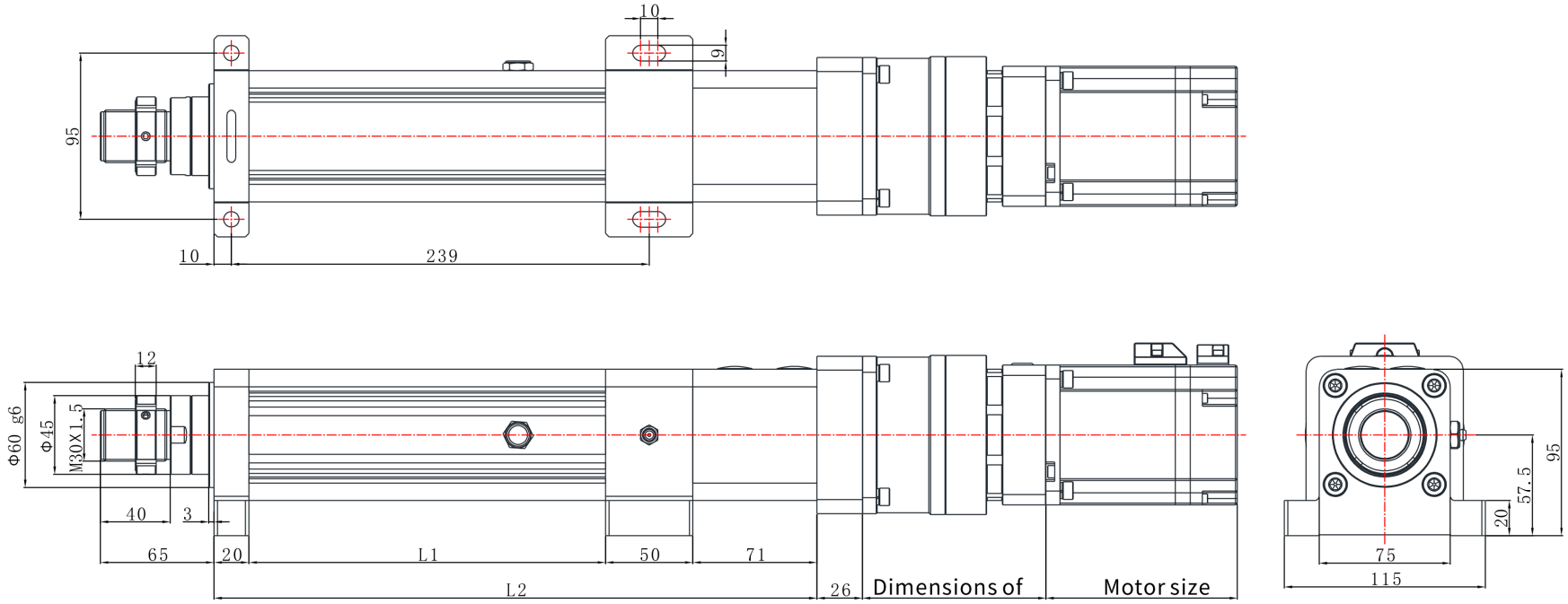

EDA75Z | Dimension drawing

Catalog drawing

EDA75Z L03 dimension drawing illustrate:L1=Scalable length+104,L2=Scalable length+245 | L03

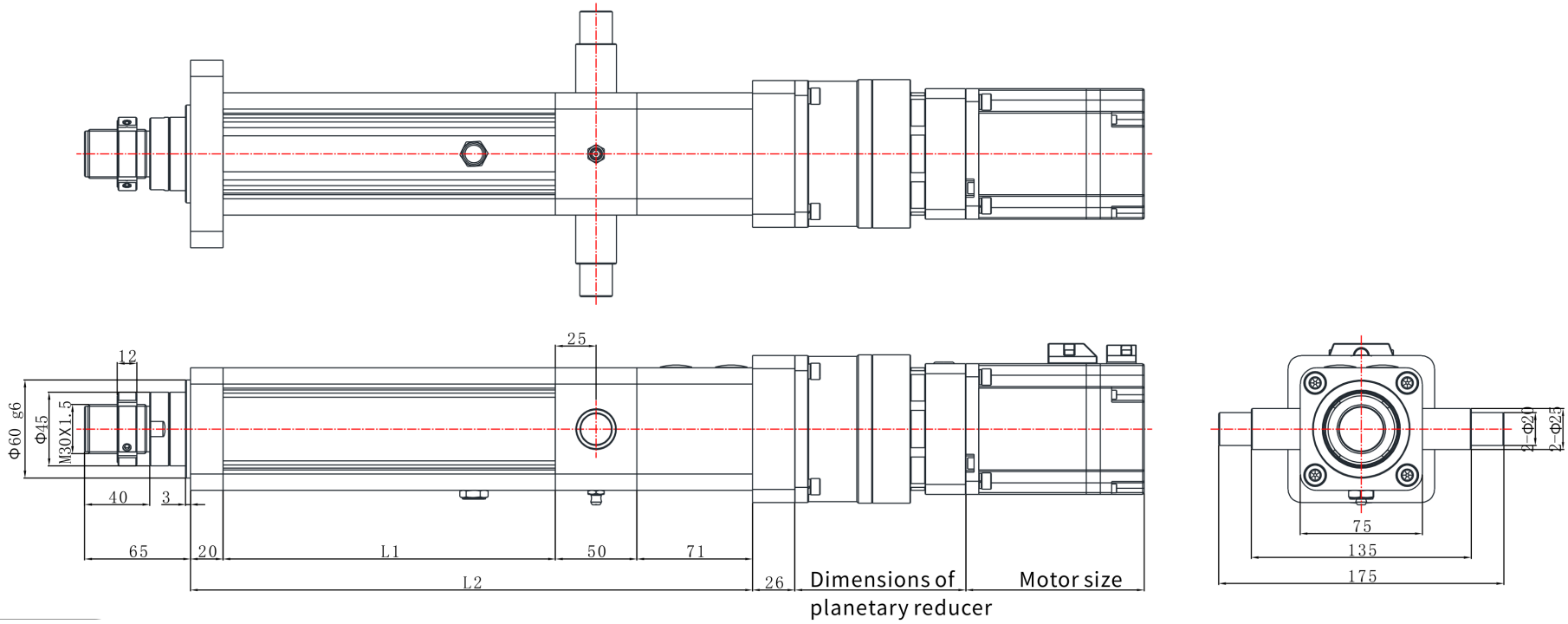

EDA75Z | Dimension drawing

Catalog drawing

EDA75Z L07 dimension drawing illustrate:L1=Scalable length+104,L2=Scalable length+255 | L07

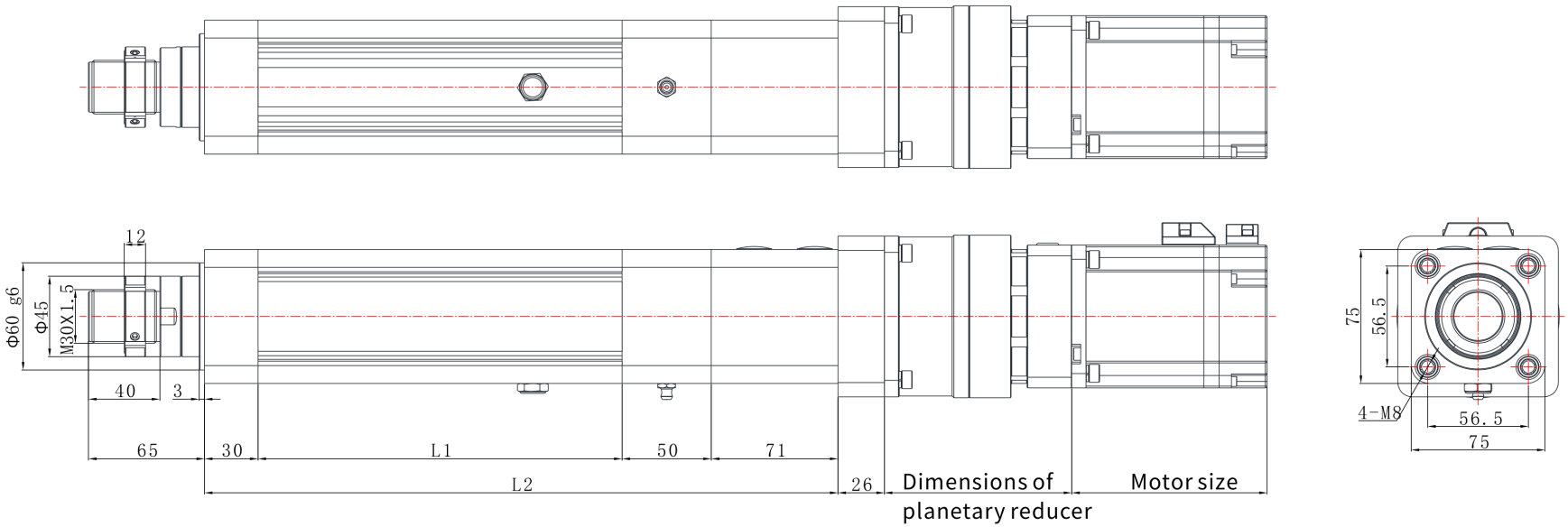

EDA75Z | Dimension drawing

Catalog drawing

EDA75Z L01 dimension drawing illustrate:L1=Scalable length+104,L2=Scalable length+245 | L01

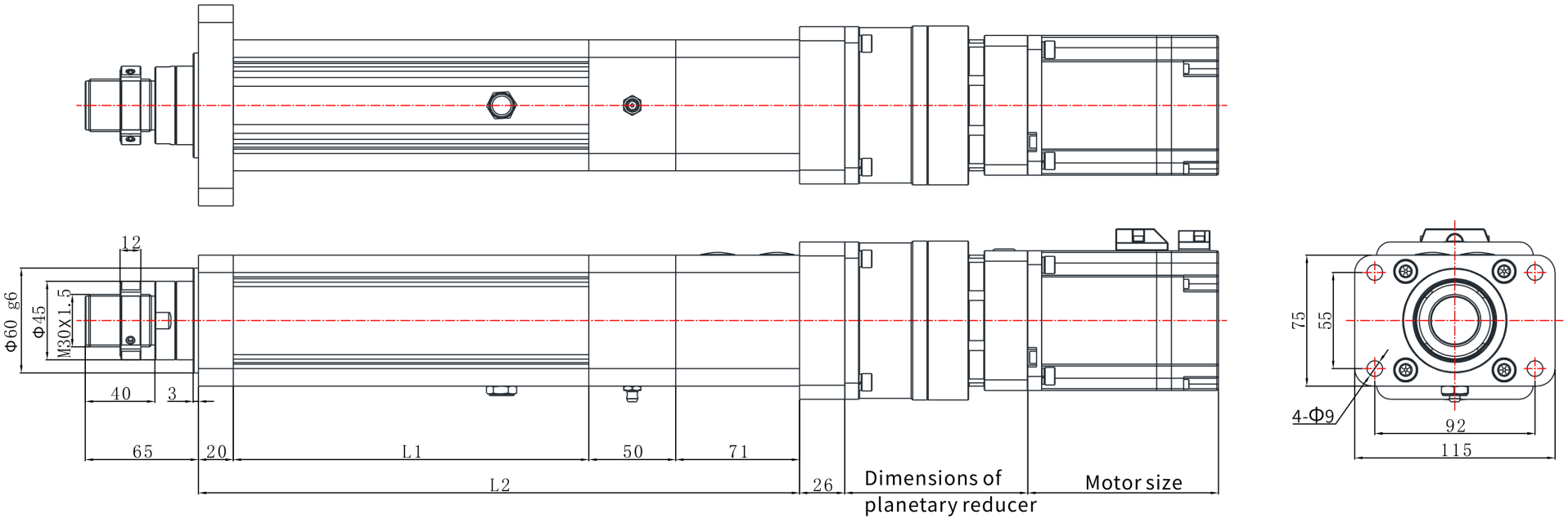

EDA75Z | Dimension drawing

Catalog drawing
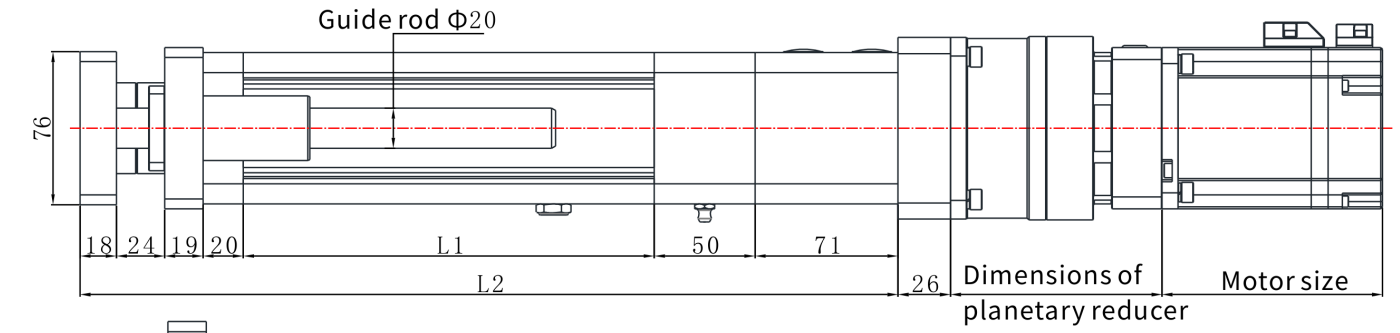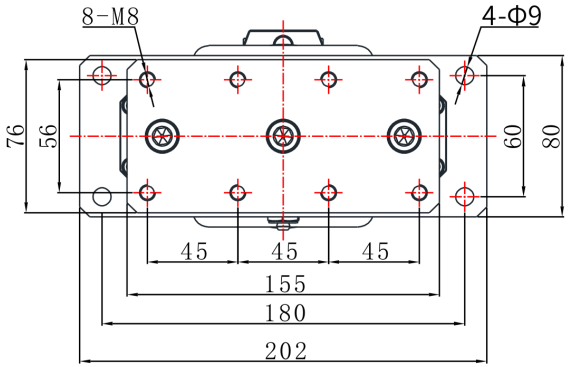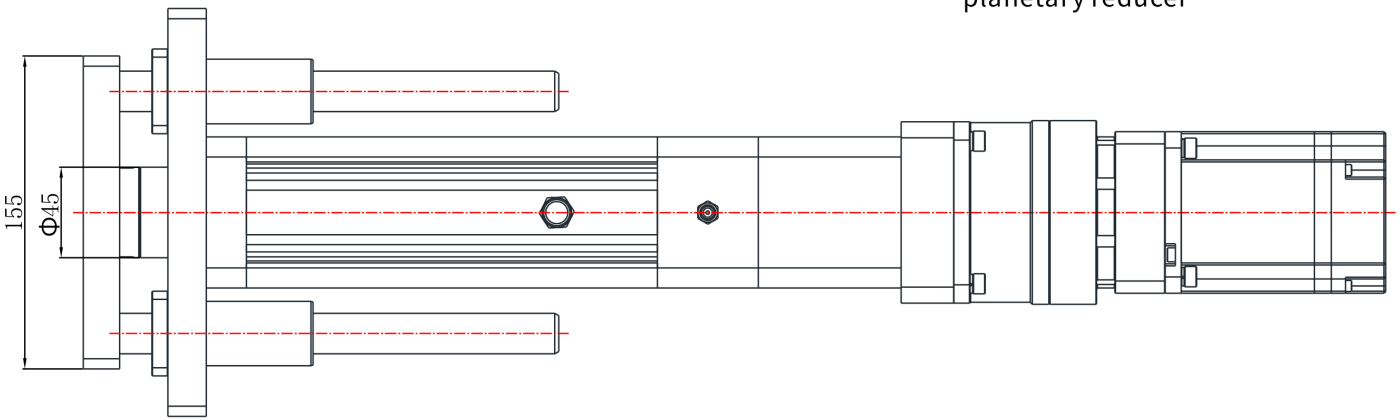
EDA75Z L06 dimension drawing illustrate:L1=Scalable length+104,L2=Scalable length+306 | L06