HOW TO USE THIS ATLAS

Each view is the catalog drawing for the stated variant or ratio group. Use the printed labels, not a scale measurement. These are reference drawings, not CAD files.

EDA300 / Drawing atlas

CONTENTS

R01	1 views | pages 2-2
L01	1 views | pages 3-3

CONTACT HTROBOT

Email: emmy@htrobot.com

Website: www.htrobot.com

EDA300 | Dimension drawing

Catalog drawing

EDA300 R01 dimension drawing illustrate:L1=Scalable length+420,L2=Scalable length+692 | R01

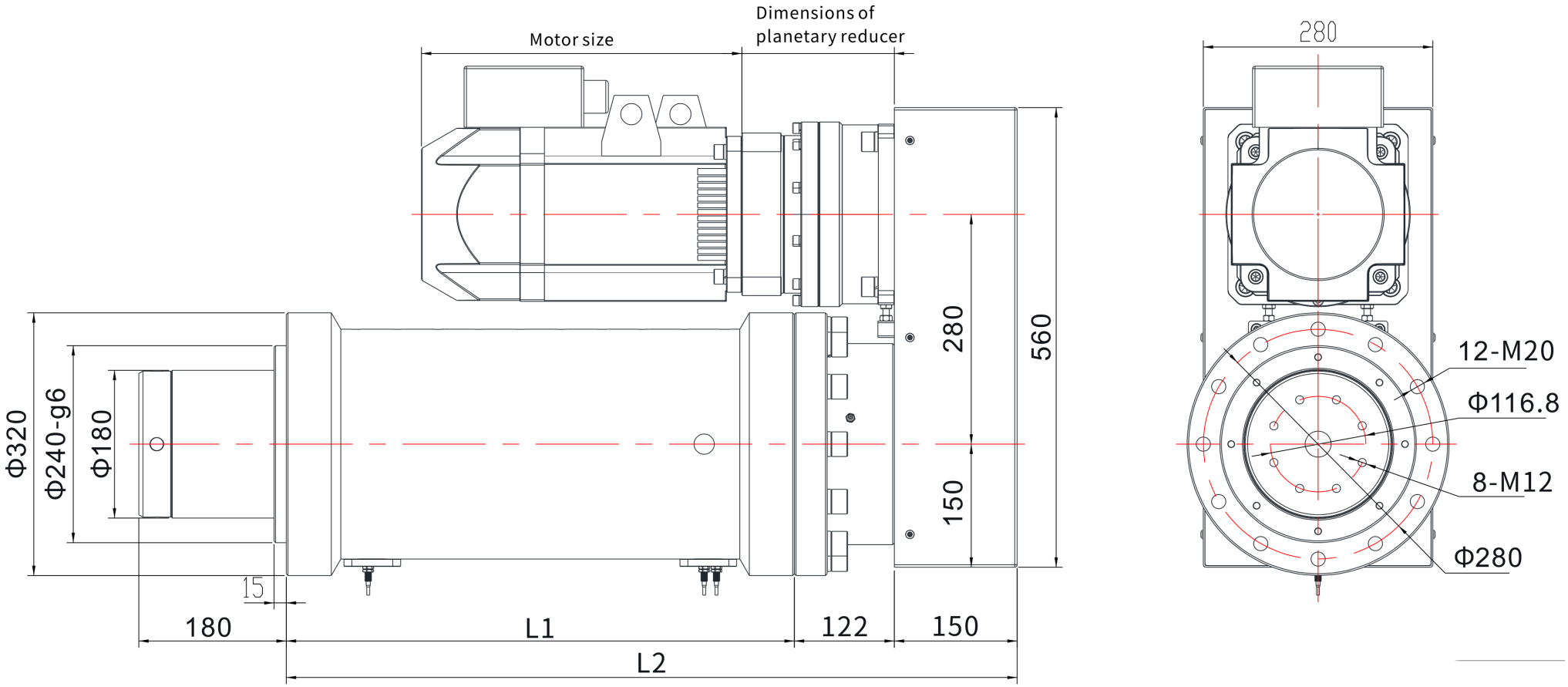

EDA300 | Dimension drawing

Catalog drawing
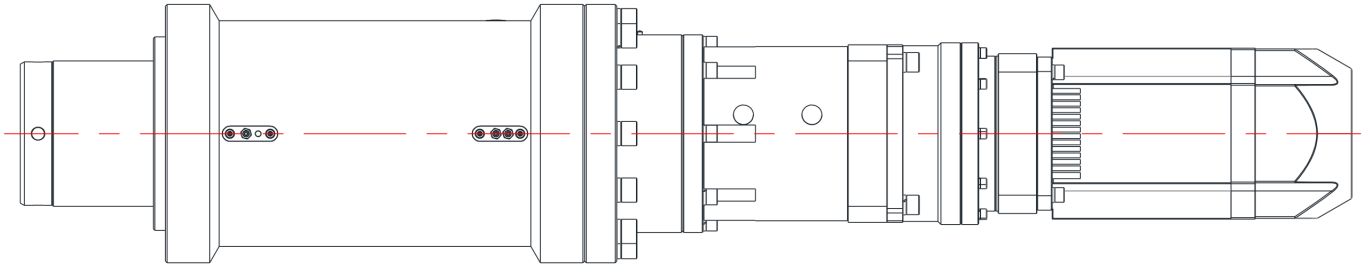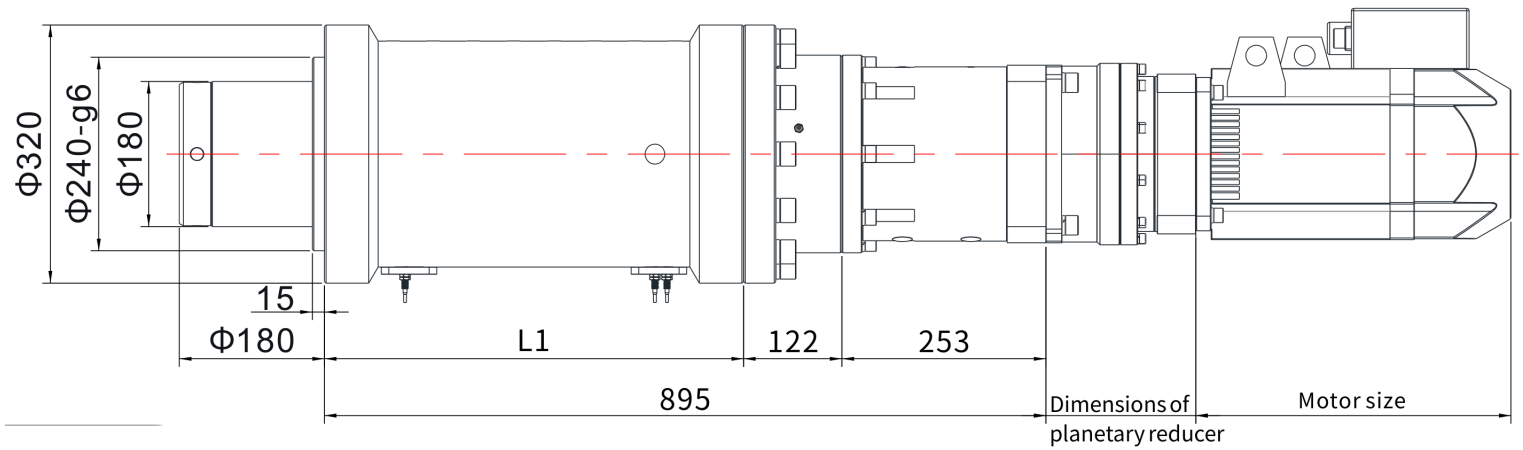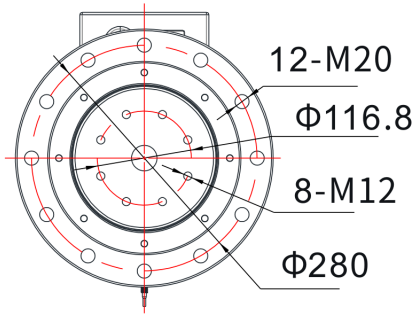
EDA300 L01 dimension drawing illustrate:L1=Scalable length+380,L2=Scalable length+695 | L01