HOW TO USE THIS ATLAS

Each view is the catalog drawing for the stated variant or ratio group. Use the printed labels, not a scale measurement. These are reference drawings, not CAD files.

EDT-B-220 / Drawing atlas

CONTENTS

Upper Reduction View	1 views | pages 2-2
Lower Reduction View	1 views | pages 3-3
Shaft Variants	1 views | pages 4-4

CONTACT HTROBOT

Email: emmy@htrobot.com

Website: www.htrobot.com

EDT-B-220 | Dimension drawing

Catalog drawing

EDT-B-220 upper reduction view dimensions in mm | upper-reduction-view

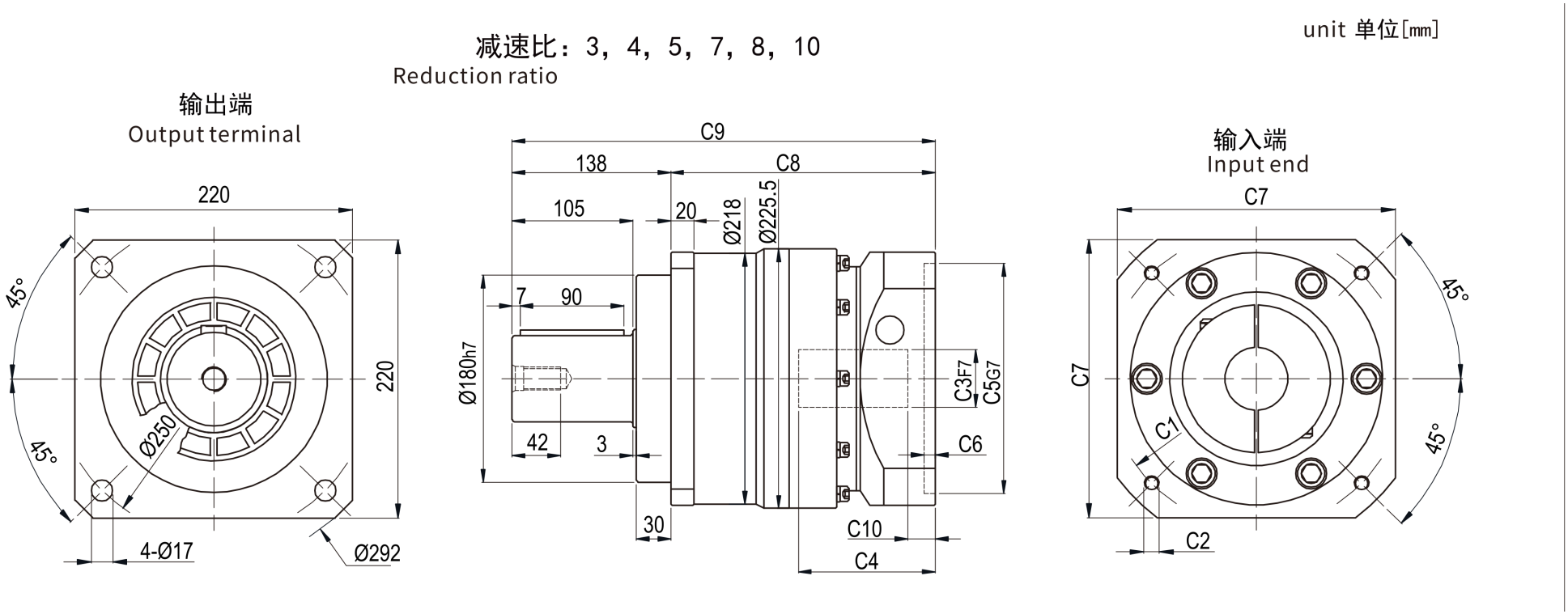

EDT-B-220 | Dimension drawing

Catalog drawing

EDT-B-220 lower reduction view dimensions in mm | lower-reduction-view

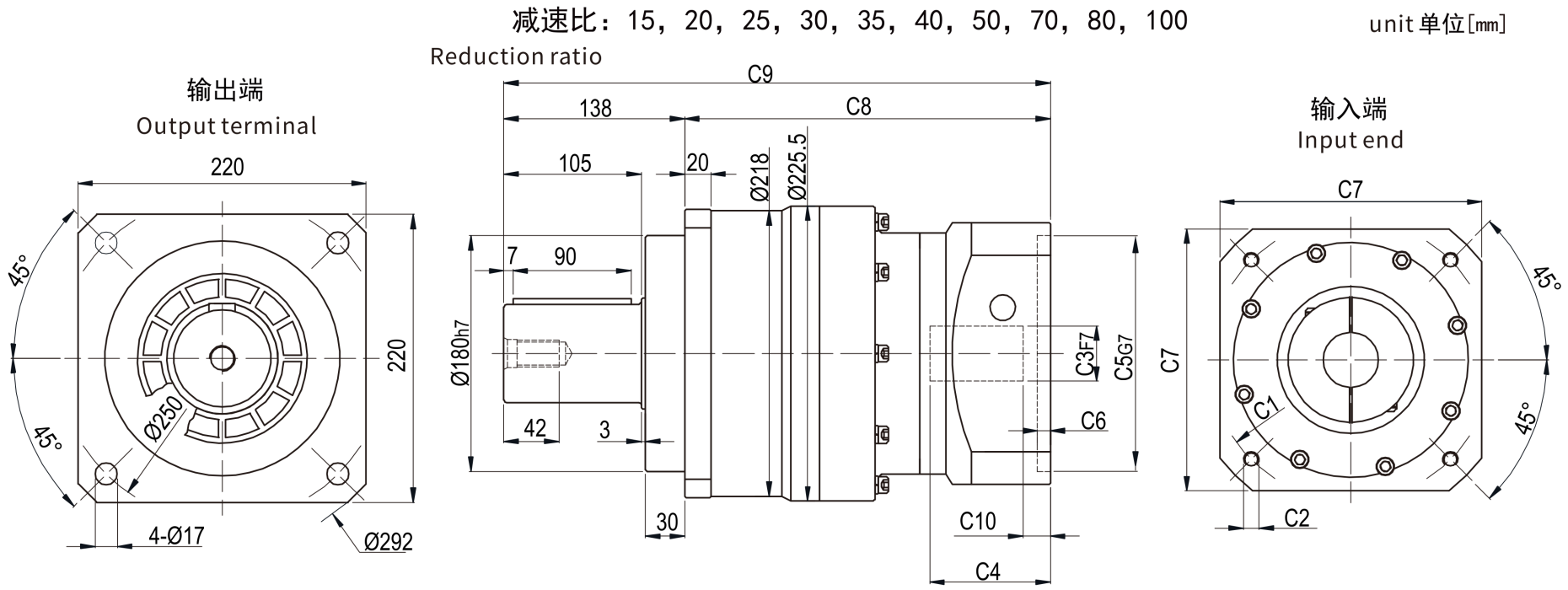

EDT-B-220 | Dimension drawing

Catalog drawing

EDT-B-220 shaft variants S1 left / S2 right | shaft-variants

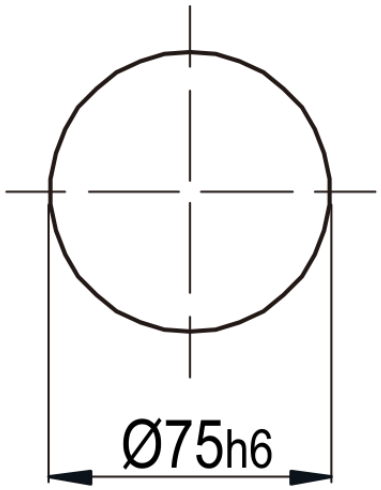

轴型式 S1

Shaft Type

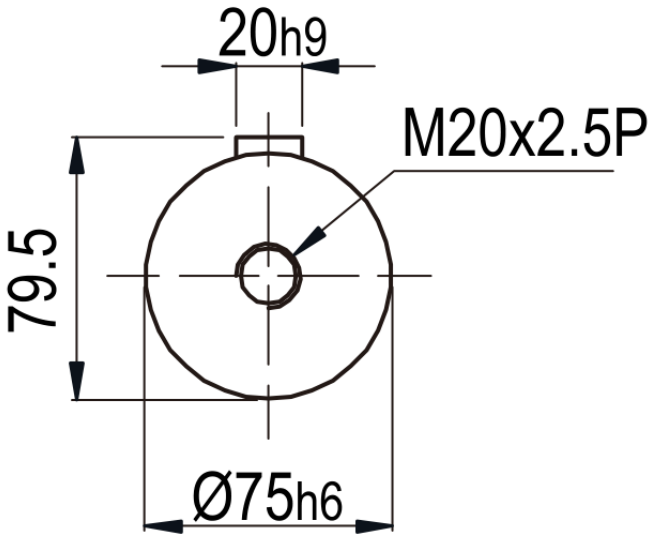

轴型式 S2

Shaft Type