Telescopic axis series HTSL150

SL150 · Telescopic axis series

Check support and mounting through the complete extension range. Include the load moment and cable space in the installation review.

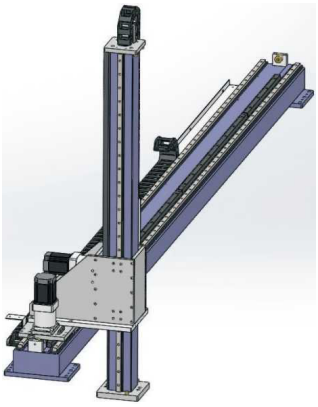

SL series illustration

Reviewed specifications

Parameter	Value
Repeatability	±0.1 mm
Vertical load	300 kg
Gear lead	250 mm
Gearbox number (printed header mm)	180 mm
Gear specification	3M
Linear guide (source code)	30
Ordering example (reference)	SL150-L250-S500-R160-C4-D
Sensor model	Outside FC307 (NPN)
Stroke range and pitch	100-2050mm/interval 50

Installation drawings are in the separate dimension atlas.

emmy@htrobot.com www.htrobot.com

Engineering reference

Application notes

Application reference: The source describes telescopic shafts for handling, palletizing and sorting in logistics, automotive and medical equipment, with vertical transport as a space-saving application.

Installation reference: With and without bellows cover are shown on the facing source drawing page.

Ordering and specification differences: The example gearbox isR160 and its annotation160mm; the basic table says180mm.